11 Drives and connecting flange for group 1 pumps

E45

E45 code: 200760400170

Bush code: 200658200061

Coupling code: 200659600061

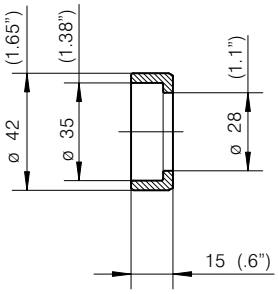

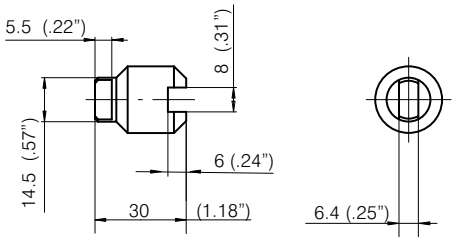

Connecting flange code: 200658200190

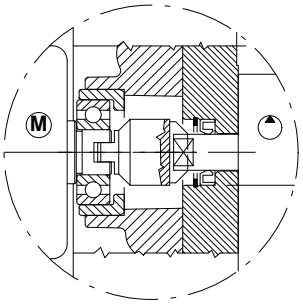

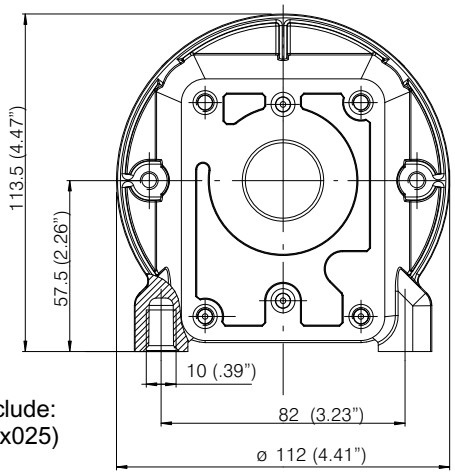

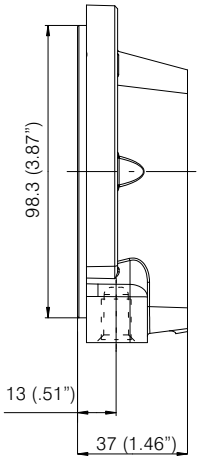

The connecting flange code doesn't include:
+ 4 screw code: 200521603013 (M006x025)
+ 4 washer code: 200530390611

E56

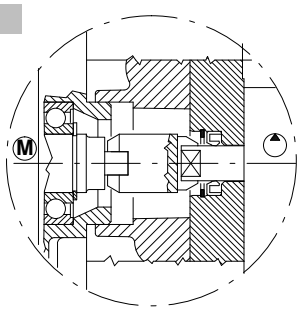

The connecting flange code doesn't include:
+ 4 screw code: 200521603013 (M006x025)
+ 4 washer code: 200530390611

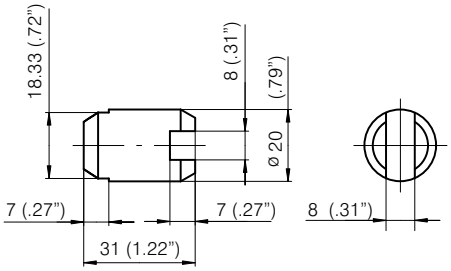

Coupling code: 200659600140

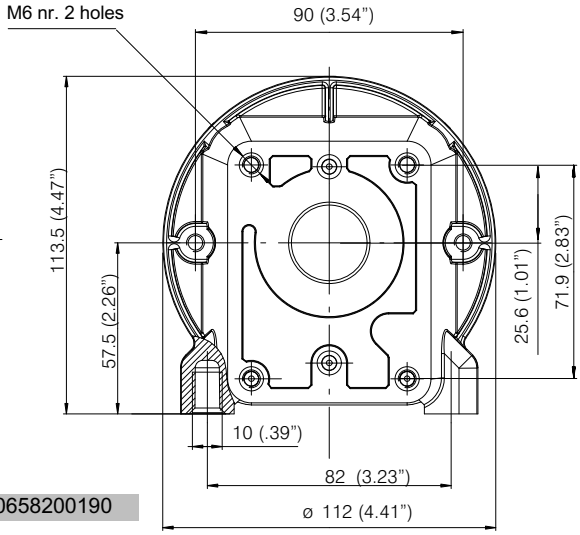

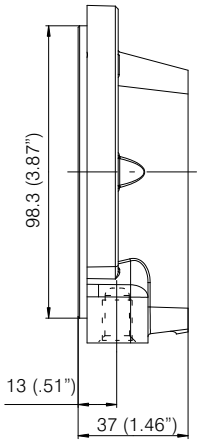

Connecting flange code: 200658200190